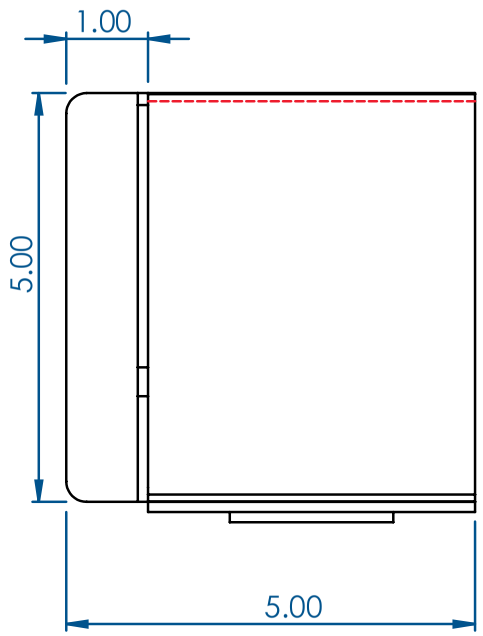

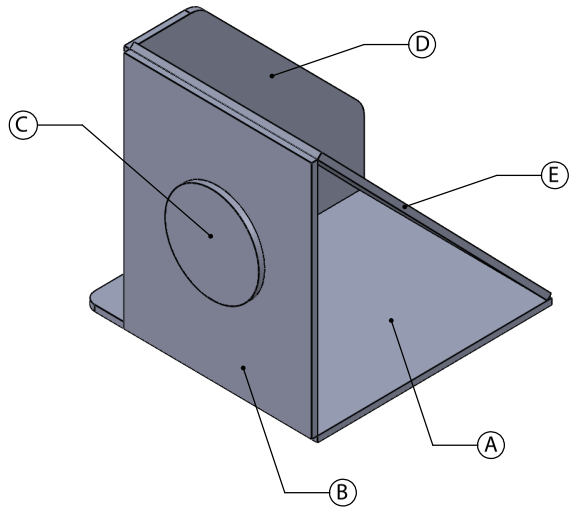

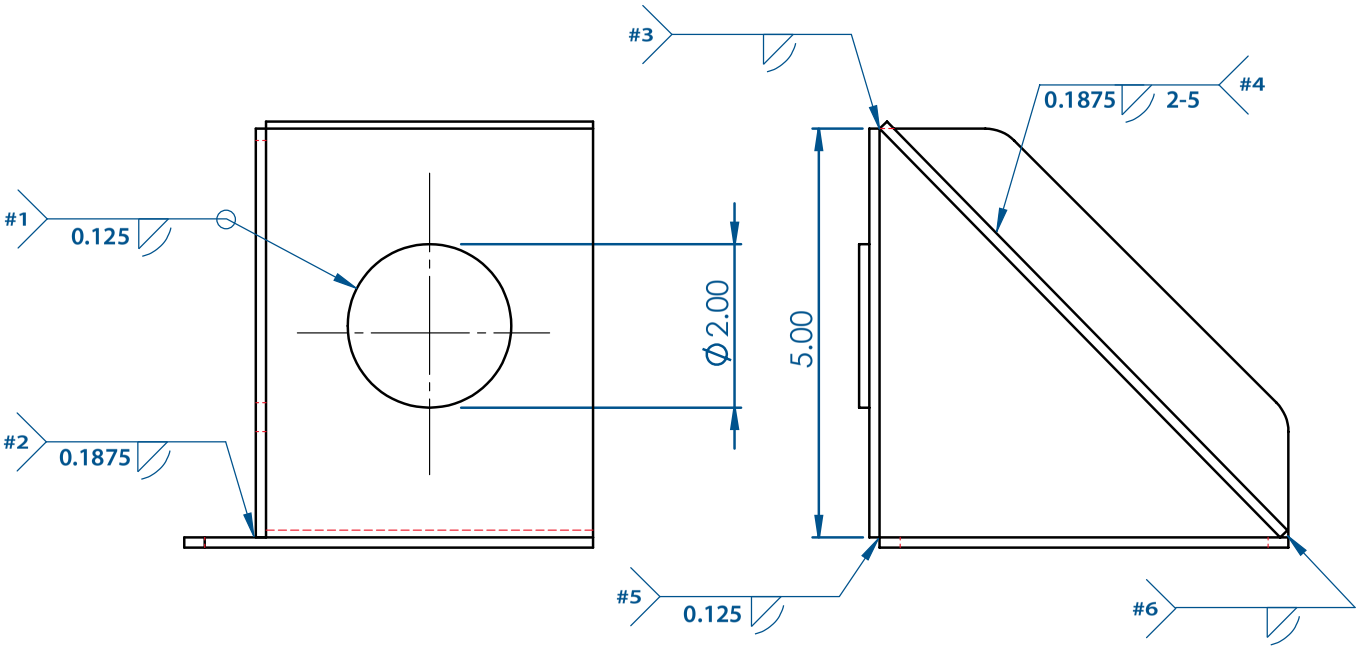

ID	QTY.	DESC.
A	1	0.125 x 5 x 5
B	1	0.125 x 4 x 5
C	1	0.125 x 2 Dia.
D	1	0.125 x 5 x 5 Gusset
E	1	0.125 x 4 x 7

ALL PROCESSES TO BE COMPLETED WITH THE MATERIALS PROVIDED

1. TACK COMPLETE ASSEMBLY IN ANY POSITION.

2. WELDING TO BE COMPLETED WITH PLATE A FLAT TO THE TABLE

3. ALL VERTICAL WELDS TO BE WELDED IN THE UPHILL PROGRESSION.

4. NO POST WELD CLEANING ALLOWED

TITLE: STATE

SkillsUSA

Welding Contest

DWG. NO.

GTAW - Aluminum

THE INFORMATION CONTAINED IN THIS DRAWING IS THE SOLE PROPERTY OF WELDERMADE.COM. ANY REPRODUCTION IN PART OR AS A WHOLE WITHOUT THE WRITTEN PERMISSION OF WELDERMADE.COM IS PROHIBITED.

STATE SUSAT

SHEET 1 OF 1

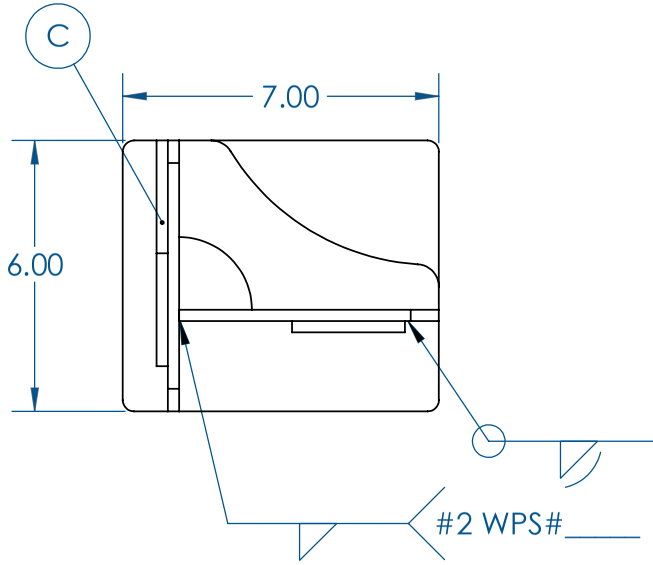

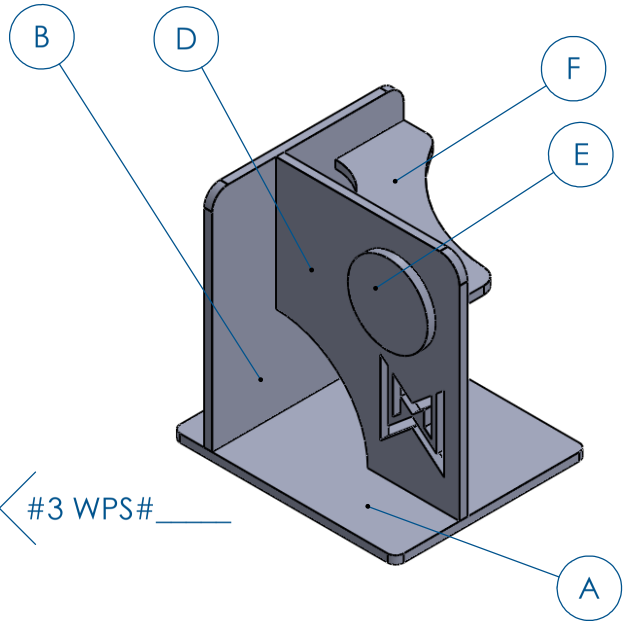

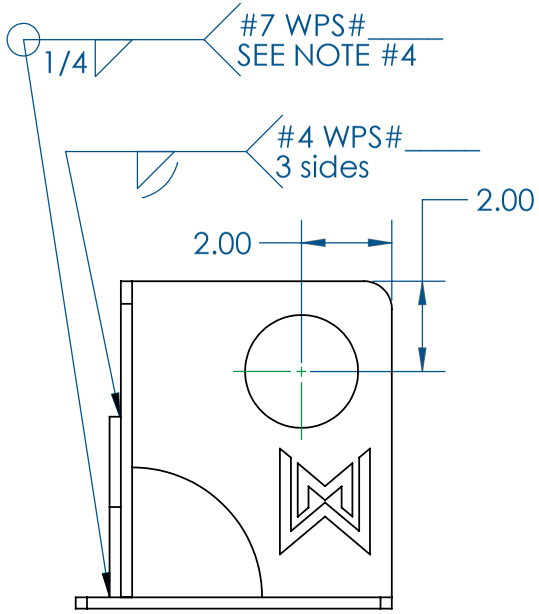

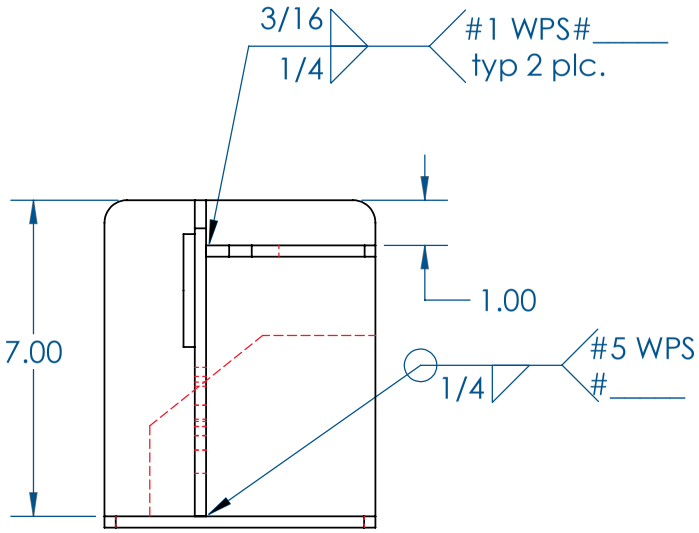

PART	DESCRIPTION	QTY.
A	7"x 6"x .25	1
B	6" x 6"x .25	1
C	5"x 4"x .25	1
D	7"x 5.75" x.25	1
E	2.5" circle .25	1
F	3.75" x 5.75"x .25	1

ALL PROCESSES TO BE COMPLETED WITH THE MATERIALS PROVIDED
ALL WELD PROCESSES/PROCEDURES ASSIGNED BY TECHNICAL COMMITTEE

1. TACK AND COMPLETE ASSEMBLY IN ANY POSITION.

2. WELDING TO BE COMPLETED WITH PLATE A FLAT TO THE TABLE

3. ALL VERTICAL WELDS TO BE WELDED IN THE UPHILL PROGRESSION.

4. Weld #7 WELD COMPLETE ASSEMBLY B&C

TITLE:

STATE

SkillsUSA®

WELDING CONTEST

DWG. NO.

SMAW,GMAW,FCAW-G

THE INFORMATION CONTAINED IN THIS DRAWING IS THE SOLE PROPERTY OF WELDERMADE.COM. ANY REPRODUCTION IN PART OR AS A WHOLE WITHOUT THE WRITTEN PERMISSION OF WELDERMADE.COM IS PROHIBITED.

weldermade.com

SkillsUSA

Welding Procedure Specification

WPS 108

WPS No. **WPS 108** Revision **2** Date **01/03/2023** By **CRV**

Authorized By **EN** Date **4/19/2016** Prequalified ☒

Welding Process(es) **FCAW-G** Type: Manual ☐ Machine ☐ Semi-Auto ☒ Auto ☐

Supporting PQR(s) **Prequalified**

JOINT

Type **T-Joint, Butt, Flanged**

Backing Yes ☐ No ☒ Single Weld ☒ Double Weld ☒

Backing Material **N/A**

Root Opening **0** Root Face Dimension **N/A**

Groove Angle **N/A** Radius (J-U) **N/A**

Back Gouge Yes ☐ No ☒

Method **N/A**

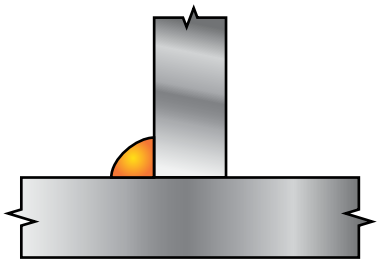

BASE METALS

Material Spec. **A-36** to **A-36**

Type or Grade to

Thickness: Groove ( ) **Unlimited** - **N/A**

Fillet (in) **Unlimited** -

Diameter (Pipe,) **N/A** - **N/A**

FILLER METALS

AWS Specification **A5.20**

AWS Classification **E71T-1**

SHIELDING

Flux **N/A**

Electrode-Flux (Class) **N/A**

Gas

Composition **75%Argon/25%CO2**

Flow Rate **35-45 CFH**

Gas Cup Size **1/2" - 3/4"**

PREHEAT

Preheat Temp., Min. **60 Deg.F**

Thickness Up to 3/4" Temperature **N/A**

Over 3/4" to 1-1/2" **N/A**

Over 1-1/2" to 2-1/2" **N/A**

Over 2-1/2" **N/A**

Interpass Temp., Min. **N/A** Max. **N/A**

POSITION

Position of Groove **All** Fillet **All**

Vertical Progression: ☒ Up ☐ Down

ELECTRICAL CHARACTERISTICS

Transfer Mode (GMAW):

Short-Circuiting ☐ Globular ☐ Spray ☐

Current: AC ☐ DCEP ☒ DCEN ☐ Pulsed ☐

Other **N/A**

Tungsten Electrode (GTAW):

Size **N/A** Type **N/A**

TECHNIQUE

Stringer or Weave Bead **Both**

Multi-pass or Single Pass (per side) **Multiple/Single**

Number of Electrodes **1**

Electrode Spacing: Longitudinal **N/A**

Lateral **N/A**

Angle **N/A**

Contact Tube to Work Distance **1/2" to 3/4"**

Peening **N/A**

Interpass Cleaning **Chip slag and wire brush**

POSTWELD HEAT TREATMENT

PWHT Required ☐

Temp. **N/A** Time **N/A**

WELDING PROCEDURE

Layer/Pass	Process	Filler Metal Class	Diameter	Cur. Type	Amps	Volts	Travel Speed	Other Notes
All	FCAW-G	E71T-1	0.045	DCEP	200-260	20-26	5-12	WFS:200-500ipm

SkillsUSA

Welding Procedure Specification

WPS 104

WPS No. **WPS 104** Revision **4** Date **01/03/2023** By **CRV**

Authorized By **EN** Date **03/03/2020** Prequalified ■

Welding Process(es) **GMAW-S** Type: Manual ☐ Machine ☐ Semi-Auto ■ Auto ☐

Supporting PQR(s) **Prequalified**

JOINT

Type **T-Joint**

Backing Yes ☐ No ■ Single Weld ■ Double Weld ■

Backing Material **N/A**

Root Opening **N/A** Root Face Dimension **N/A**

Groove Angle **N/A** Radius (J-U) **N/A**

Back Gouge Yes ☐ No ■

Method **N/A**

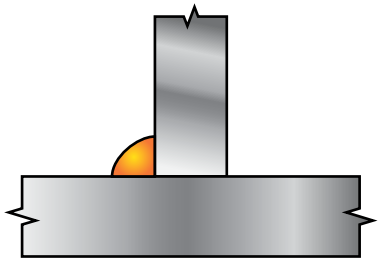

BASE METALS

Material Spec. **A 36** to **A 36**

Type or Grade to

Thickness: Groove ( ) **N/A** - **N/A**

Fillet (in) **Unlimited** -

Diameter (Pipe,) **N/A** - **N/A**

FILLER METALS

AWS Specification **A5.18**

AWS Classification **ER70S-6**

SHIELDING

Flux **N/A**

Electrode-Flux (Class) **N/A**

Gas **M20-ArC-25**

Composition **75%Argon/25%CO2**

Flow Rate **35-45 CFH**

Gas Cup Size **1/2" - 3/4"**

PREHEAT

Preheat Temp., Min. **60 Deg.F**

Thickness Up to 3/4" Temperature **N/A**

Over 3/4" to 1-1/2" **N/A**

Over 1-1/2" to 2-1/2" **N/A**

Over 2-1/2" **N/A**

Interpass Temp., Min. **N/A** Max. **N/A**

POSITION

Position of Groove **All** Fillet **All**

Vertical Progression: ■ Up ■ Down

ELECTRICAL CHARACTERISTICS

Transfer Mode (GMAW):

Short-Circuiting ■ Globular ☐ Spray ☐

Current: AC ☐ DCEP ■ DCEN ☐ Pulsed ☐

Other **N/A**

Tungsten Electrode (GTAW):

Size **N/A** Type **N/A**

TECHNIQUE

Stringer or Weave Bead **Stringer**

Multi-pass or Single Pass (per side) **Single**

Number of Electrodes **1**

Electrode Spacing: Longitudinal **N/A**

Lateral **N/A**

Angle **N/A**

Contact Tube to Work Distance **1/4" to 3/8"**

Peening **N/A**

Interpass Cleaning **Chip slag and wire brush**

POSTWELD HEAT TREATMENT

PWHT Required ☐

Temp. **N/A** Time **N/A**

WELDING PROCEDURE

Layer/Pass	Process	Filler Metal Class	Diameter	Cur. Type	Amps	Volts	Travel Speed	Other Notes
All	GMAW	ER70S-6	0.035"	DCEP	90-150	16-20	6-8 ipm	WFS 140-350 ipm

SkillsUSA

Welding Procedure Specification

WPS 103

WPS No. **WPS 103** Revision **3** Date **01/03/2023** By **CRV**

Authorized By **GH** Date **5/15/2011** Prequalified ■

Welding Process(es) **GTAW** Type: Manual ■ Machine ☐ Semi-Auto ☐ Auto ☐

Supporting PQR(s) **Prequalified**

JOINT

Type **T-Joint / Corner**

Backing Yes ☐ No ■ Single Weld ■ Double Weld ☐

Backing Material **N/A**

Root Opening **0** Root Face Dimension **0**

Groove Angle **30-90** Radius (J-U) **N/A**

Back Gouge Yes ☐ No ■

Method **N/A**

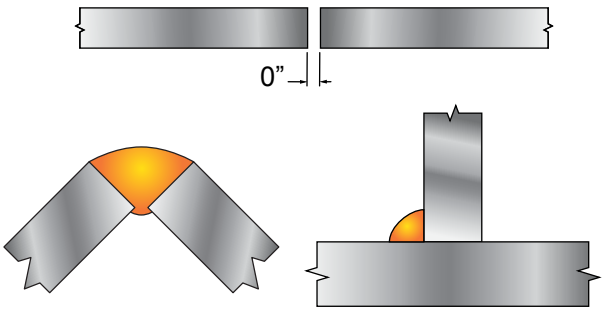

BASE METALS

Material Spec. **3003** to **3003**

Type or Grade to

Thickness: Groove ( ) **Unlimited** - **N/A**

Fillet (in) **Unlimited** -

Diameter (Pipe,) **N/A** - **N/A**

FILLER METALS

AWS Specification **A5.10**

AWS Classification **ER4043**

SHIELDING

Flux **N/A**

Electrode-Flux (Class) **N/A**

Gas **100%Argon**

Composition **100%Argon**

Flow Rate **15-25 CFH**

Gas Cup Size **3/8" Min. (#6)**

PREHEAT

Preheat Temp., Min. **60 Deg.F**

Thickness Up to 3/4" Temperature **N/A**

Over 3/4" to 1-1/2" **N/A**

Over 1-1/2" to 2-1/2" **N/A**

Over 2-1/2" **N/A**

Interpass Temp., Min. **N/A** Max. **N/A**

POSITION

Position of Groove **All** Fillet **All**

Vertical Progression: ■ Up ☐ Down

ELECTRICAL CHARACTERISTICS

Transfer Mode (GMAW):

Short-Circuiting ☐ Globular ☐ Spray ☐

Current: AC ■ DCEP ☐ DCEN ☐ Pulsed ☐

Other **N/A**

Tungsten Electrode (GTAW):

Size **3/32"** Type **EWCe2**

TECHNIQUE

Stringer or Weave Bead **Stringer**

Multi-pass or Single Pass (per side) **Multiple/Single**

Number of Electrodes **1**

Electrode Spacing: Longitudinal **N/A**

Lateral **N/A**

Angle **N/A**

Contact Tube to Work Distance **N/A**

Peening **N/A**

Interpass Cleaning

POSTWELD HEAT TREATMENT

PWHT Required ☐

Temp. **N/A** Time **N/A**

WELDING PROCEDURE

Layer/Pass	Process	Filler Metal Class	Diameter	Cur. Type	Amps	Volts	Travel Speed	Other Notes
All	GTAW	ER4043	1/16"	AC	100-175	N/A	4-8 ipm	AC Bal. 65-75%EN
								AC Hz. 60 - 120
All	GTAW	ER4043	3/32"	AC	100-175	N/A	4-8 ipm	AC Bal. 65-75%EN
								AC Hz. 60 - 120

SkillsUSA

Welding Procedure Specification

WPS 101

WPS No. **WPS 101** Revision **4** Date **01/03/2023** By **CRV**

Authorized By **EN** Date **2/3/2020** Prequalified ■

Welding Process(es) **SMAW** Type: Manual ■ Machine ☐ Semi-Auto ☐ Auto ☐

Supporting PQR(s) **Prequalified**

JOINT

Type **Single V Groove**

Backing Yes ■ No ☐ Single Weld ■ Double Weld ☐

Backing Material **A-36**

Root Opening **0"+1/16"** Root Face Dimension **0"**

Groove Angle **45 Deg.** Radius (J-U) **N/A**

Back Gouge Yes ☐ No ■

Method **N/A**

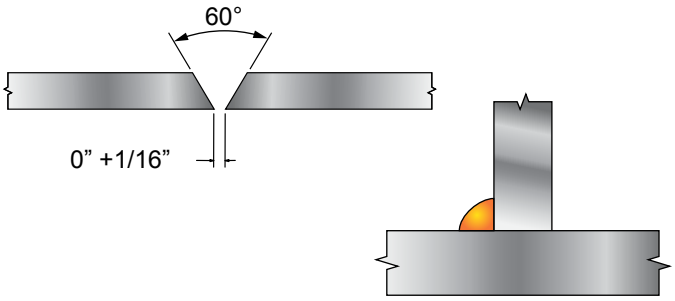

BASE METALS

Material Spec. **A-36** to **A-36**

Type or Grade to

Thickness: Groove (in) **1/8** - **3/4**

Fillet ( ) **Any** - **All**

Diameter (Pipe, in) **4** - **Unlimited**

FILLER METALS

AWS Specification **A5.1**

AWS Classification **E-7018**

SHIELDING

Flux **N/A**

Electrode-Flux (Class) **N/A**

Gas **N/A**

Composition **N/A**

Flow Rate **N/A**

Gas Cup Size **N/A**

PREHEAT

Preheat Temp., Min. **60 Deg.F**

Thickness Up to 3/4" Temperature **N/A**

Over 3/4" to 1-1/2" **N/A**

Over 1-1/2" to 2-1/2" **N/A**

Over 2-1/2" **N/A**

Interpass Temp., Min. **N/A** Max. **N/A**

POSITION

Position of Groove **1G,2G,3G,4G,5G** Fillet **1F,2F,3F,4F,5F**

Vertical Progression: ■ Up ☐ Down

ELECTRICAL CHARACTERISTICS

Transfer Mode (GMAW):

Short-Circuiting ☐ Globular ☐ Spray ☐

Current: AC ☐ DCEP ■ DCEN ☐ Pulsed ☐

Other **N/A**

Tungsten Electrode (GTAW):

Size **N/A** Type **N/A**

TECHNIQUE

Stringer or Weave Bead **Either**

Multi-pass or Single Pass (per side) **Single / Multiple**

Number of Electrodes **1**

Electrode Spacing: Longitudinal **N/A**

Lateral **N/A**

Angle **N/A**

Contact Tube to Work Distance **N/A**

Peening **N/A**

Interpass Cleaning **Chip slag and wire brush**

POSTWELD HEAT TREATMENT

PWHT Required ☐

Temp. **N/A** Time **N/A**

WELDING PROCEDURE

Layer/Pass	Process	Filler Metal Class	Diameter	Cur. Type	Amps	Volts	Travel Speed	Other Notes
All	SMAW	E-7018	1/8	DCEP	90-150	N/A	4-10 ipm	

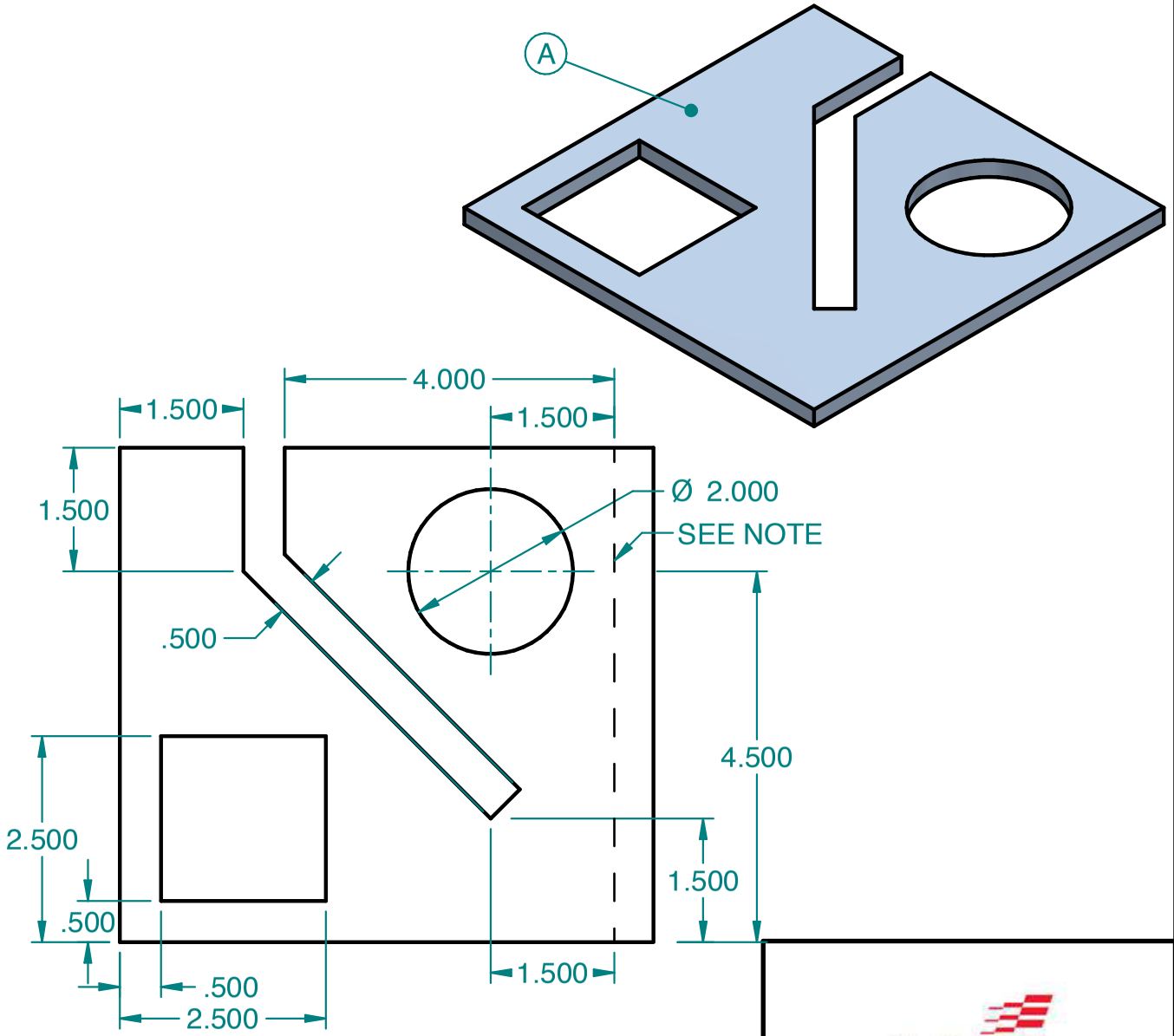

Item	Qty.	Description
A	1	0.25 x 6 x 6.5

ALL PROCESSES TO BE COMPLETED WITH THE MATERIALS PROVIDED

NOTE: PERFORM A SQUARE CUT ALONG DASHED LINE

UNLESS OTHERWISE SPECIFIED DIMENSIONS ARE IN INCHES

SkillsUSA Welding Contest

TITLE PAC or OFC

SIZE A

SHEET 1 OF 1